tyco

KTM

A rugged, long-life workhorse control valve that takes punishment in stride.

Features

- Rotary-valve design provides shearing action between the V-notch ball and the seat, promoting a smooth, non-clogging operation.
- Straight-through flow design provides high capacity for fibrous slurries, steam, liquids and gasses.
- With a single-seat design, torque is lower than typical trunnion design valves, for ease of operation and reduced actuator cost.
- Two seat designs:
  - Laminated seat provides Class VI shut-off and withstands tough operating conditions.
  - Thick (solid) seat for high-velocity and abrasive or erosive service.
- Segmented, v-notched ball features high rangeability and smooth throttling action.
- Choice of full and reduced port areas, providing the right flow capacity for every application at low cost.
- Heavy-duty, stainless steel stem for high strength and rigidity.
- Sphericity tolerance of the balls, ± 0.0008", and a 4 RMS surface finish are unsurpassed.
- Multiple, adjustable ring packing allows easy adjustment without requiring valve disassembly or actuator removal.
- Corrosion-resistant bearings assure lasting, smooth and easy valve operation.
- ANSI 150 and 300 lb. bodies, both available in stainless or carbon steel.
- Fugitive emissions control for flammable and non-flammable applications.
- Positive alignment of split body.
- Static electricity grounding device.
- Automatic cavity pressure relief.
- Meets NACE MR0175 for sulfide cracking resistance.

Special tests

- Liquid penetrant
- Magnetic-particle
- Ultra-sonic
- X-ray

Technical data

Size range : W06 Full bore 1" through 16"

: W04 Reduced bore 1½" through 20"

Total Flow Control Solutions

Tyco reserves the right to change product design and specifications without notice. Copyright © 2002 by Tyco International Ltd.

KTM Single V Control Ball Valve
Full Bore and Reduced Bore

Construction

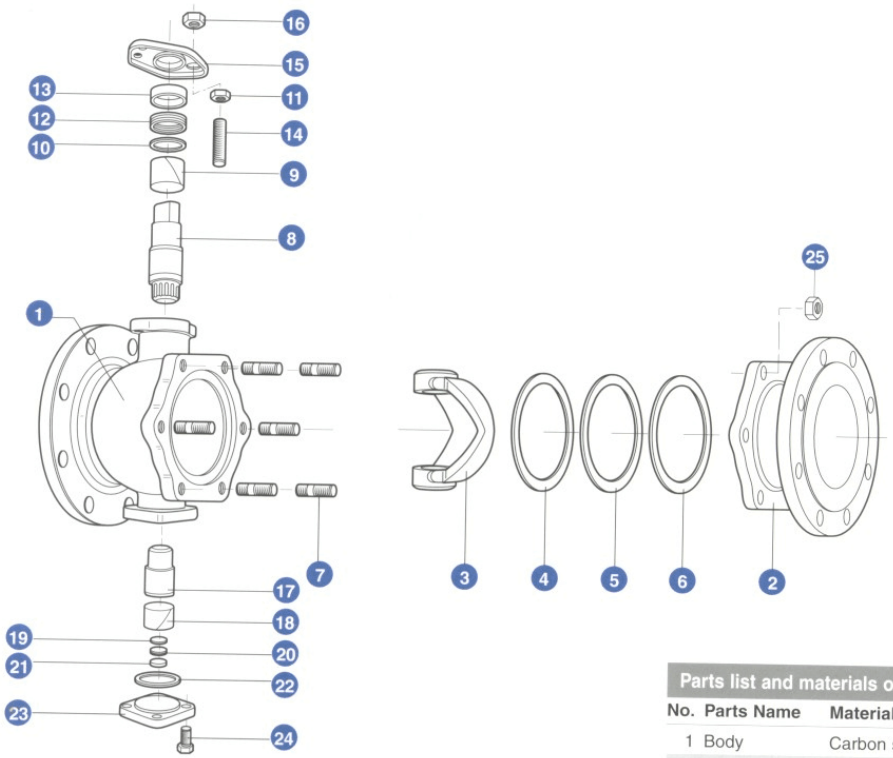

Seat Selection

The KTM Single V is a single-seat design. Torque is lower than typical trunnion design valves resulting in easier operation and reduced actuator cost. Choose from two unique seat designs:

Laminated seat: Provides tight shut-off and withstands tough operating conditions. ANSI Class IV shut-off.

Thick (solid) seat: For high-velocity and abrasive or erosive service. ANSI Class II shut-off.

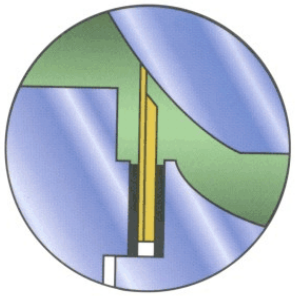

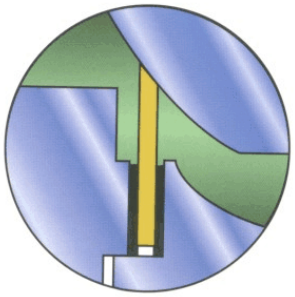

Parts list and materials of construction

No.	Parts Name	Material
1	Body	Carbon steel or 316 SS
2	Body Cap	Carbon steel or 316 SS
3	V-Ball	316 SS hard chrome or 316 SS Stellited
4	Gasket	RTFE
5	Seat	Laminated 316 SS or Thick (solid) 316 SS Stellited
6	Gasket	RTFE
7	Stud	A193 Gr. B7M or B8
8	Stem	316 SS
9	Bearing	RTFE
10	Thrust Washer	316 SS
11	Nut	A194 Gr. 2HM or 8
12	Gland Packing	Standard PTFE V-Ring
13	Gland	304 SS
14	Gland Bolt	A193 Gr. B8
15	Gland Flange	304 SS or Ductile Iron
16	Nut	A194 Gr. 8
17	Lower Stem	316 SS
18	Bearing	RTFE
19	Thrust Bearing	RTFE
20	Shim	316 SS
21	Pivot	316 SS
22	Gasket	RTFE
23	Bottom Cap	Carbon steel or 316 SS
24	Bolt	A193 Gr. B8
25	Nut	A194 Gr. 8

Tyco reserves the right to change product design and specifications without notice. Copyright © 2002 by Tyco International Ltd.

C_V Values

Inherent Flow Characteristics

Single-V valves maintain an inherent flow characteristic, which is approximately midway between linear and equal percent.

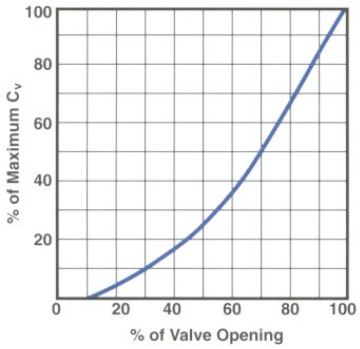

C_V Values Full Port (Laminated Seat)

Valve Size	Percent Open 10	20	30	40	50	60	70	80	90	100
1"	1	0.7	1.9	3.1	4.8	7.2	10.3	14.6	19	25
1½"	0.5	2.6	6.8	11.2	17.3	26	37	53	70	90
2"	0.7	4.2	10.9	18	28	42	60	85	112	145
2½"	1.2	7.1	18.4	30	47	71	101	145	190	245
3"	1.8	10.4	27	45	69	104	150	210	279	360
4"	2.8	16	41	68	105	159	230	325	425	550
5"	5.4	31	80	133	205	309	443	627	830	1070
6"	7.5	44	113	186	288	435	620	880	1160	1500
8"	13.8	80	206	340	530	795	1140	1610	2130	2750
10"	22	128	330	545	845	1270	1820	2580	3410	4400
12"	32	187	484	800	1240	1865	2670	3780	5000	6450

C_V Values Reduced Port (Laminated Seat)

Valve Size	Percent Open 10	20	30	40	50	60	70	80	90	100
1½"	1.5	0.7	1.9	3.1	4.8	7.2	10.3	14.6	19	25
2"	0.5	2.6	6.8	11.2	17.3	26	37	53	70	90
2½"	0.7	4.2	10.9	18	28	42	60	85	112	145
3"	1.2	7.1	18.4	30	47	71	101	145	190	245
4"	1.8	10.4	27	45	69	104	150	210	279	360
5"	2.8	16	41	68	105	159	230	325	425	550
6"	5.4	31	80	133	205	309	443	627	830	1070
8"	7.5	44	113	186	288	435	620	880	1160	1500
10"	13.8	80	206	340	530	795	1140	1610	2130	2750
12"	22	128	330	545	845	1270	1820	2580	3410	4400
14"	32	187	484	800	1240	1865	2670	3780	5000	6450
16"	45	260	675	1115	1730	2600	3725	5275	6975	9000
18"	60	350	900	1490	2305	3470	4970	7030	9300	12000
20"	76	440	1140	1885	2920	4395	6295	8905	11800	15200

Note

W0400 (Reduced Port) is indicated in RED
W0600 (Full Port) is indicated in BLUE

Torque Data

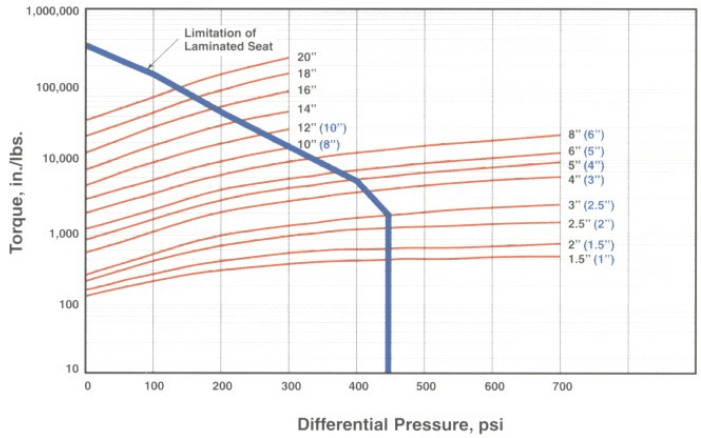

Tyco reserves the right to change product design and specifications without notice. Copyright © 2002 by Tyco International Ltd.

Dimensions and Weights

150 lb. Class Dimensions

Valve	W06 Full Bore			W04 Reduced Bore			150 Lb. Flange					
Size	L	C	E	L	C	E	D	B	G	T	(N)	h
1"	5.00	2.69	5.00	–	–	–	4.25	3.13	2.00	0.44	(4)	3/4
1½"	6.50	3.62	5.91	6.50	2.69	5.00	5.00	3.88	2.88	0.56	(4)	3/4
2"	7.00	3.81	6.09	7.00	3.62	5.91	6.00	4.75	3.63	0.63	(4)	3/4
2½"	7.50	4.31	7.23	7.50	3.81	6.09	7.00	5.50	4.13	0.69	(4)	3/4
3"	8.00	4.56	7.47	8.00	4.31	7.23	7.50	6.00	5.00	0.75	(4)	3/4
4"	9.00	5.31	8.28	9.00	4.56	7.47	9.00	7.50	6.19	0.94	(8)	3/4
5"	14.00	6.88	10.88	10.00	5.31	8.28	10.00	8.50	7.31	0.94	(8)	7/8
6"	15.50	7.31	11.38	10.50	6.88	10.88	11.00	9.50	8.50	1.00	(8)	7/8
8"	18.00	9.69	15.12	11.50	7.31	11.37	13.50	11.75	10.63	1.13	(8)	7/8
10"	21.00	10.62	16.12	13.00	9.69	15.12	16.00	14.25	12.75	1.19	(12)	1
12"	24.00	13.06	20.12	19.75	10.62	16.12	19.00	17.00	15.00	1.25	(12)	1
14"	–	–	–	22.50	13.06	20.12	21.00	18.75	16.25	1.38	(12)	1⅛
16"	–	–	–	24.00	14.06	21.12	23.50	21.25	18.50	1.44	(16)	1⅛
18"	–	–	–	26.00	16.06	23.44	25.00	22.75	21.00	1.56	(16)	1¼
20"	–	–	–	28.00	17.06	–	27.50	25.00	23.00	1.69	(20)	1¼

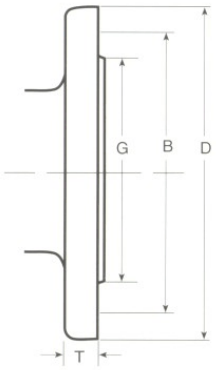

300 lb. Class Dimensions

Valve	W06 Full Bore			W04 Reduced Bore			150 Lb. Flange					
Size	L	C	E	L	C	E	D	B	G	T	(N)	h
1"	6.50	2.69	5.00	–	–	–	4.88	3.50	2.00	0.69	(4)	3/4
1½"	7.50	3.62	5.91	7.50	2.69	5.00	6.13	4.50	2.88	0.81	(4)	7/8
2"	8.50	3.81	6.09	8.50	3.62	5.91	6.50	5.00	3.63	0.88	(8)	3/4
2½"	9.50	4.31	7.23	9.50	3.81	6.09	7.50	5.88	4.13	1.00	(8)	7/8
3"	11.12	4.56	7.47	11.12	4.31	7.23	8.25	6.63	5.00	1.13	(8)	7/8
4"	12.00	5.31	8.28	12.00	4.56	7.47	10.00	7.88	6.19	1.25	(8)	7/8
5"	15.00	6.88	10.88	15.00	5.31	8.28	11.00	9.25	7.31	1.38	(8)	7/8
6"	15.88	7.31	11.38	15.88	6.88	10.88	12.50	10.63	8.50	1.44	(12)	7/8
8"	19.75	9.69	15.12	16.50	7.31	11.38	15.00	13.00	10.63	1.63	(12)	1
10"	22.38	10.62	16.12	18.00	9.69	15.12	17.50	15.25	12.75	1.88	(16)	1⅛

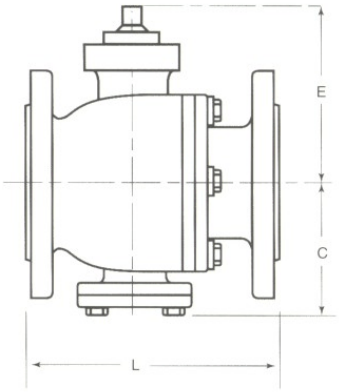

Facility Phone: 713-744-4532

tyco / Valves & Controls

www.tycovalves.com

The data presented in this bulletin is for general information only. Manufacturer is not responsible for acceptability of these products in relation to system requirements. Patents and Patents Pending in U.S. and foreign countries. All rights reserved. Printed in U.S.A. Tyco reserves the right to change product design and specifications without notice. © Copyright 2002.