KTM GRATITE™ SEAT HI-TEMP BALL VALVES

Full bore sizes: ½″—8″ (Model EO 100 Series)
Reduced bore sizes: 3″—10″ (Model EO 800 Series)

150 and 300 lb. ANSI Class
Pressure/Temperature Rating: B16.5 and B16.34 up to 932° F.

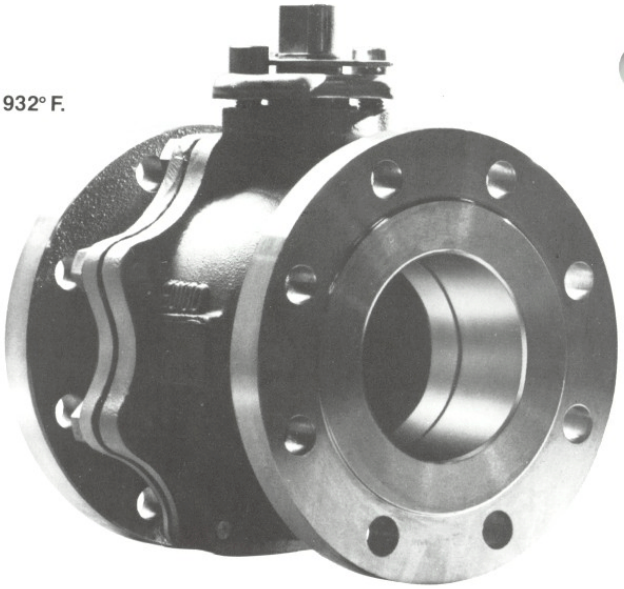

KTM's new Hi-Temp Ball Valves are designed to operate within a temperature range from −50°F. to +932°F. They incorporate valve seats of "Gratite"* (a bonded composite of hard graphite) which forms the seat along with soft graphite which is used for the cushion seal. The result is a seat with physical properties that are far superior to conventional ball valve seats of carbon graphite construction.

Features:

- ☐ More economical than stellite hard facing.
- ☐ High resistance to thermal shock.
- ☐ High electro conductivity eliminates need for grounding device.
- ☐ Seats and seals are virtually chemically inert.
- ☐ Blow-out proof stem.
- ☐ Two-piece body construction.
- ☐ Available in full and reduced bores.

MATERIALS

Part No.	Part Name	Model No. EO162-31FU EO862-31FU	Model No. EO132-32FU EO832-32FU
1	Body	Carbon Steel	316SS
2	Body Cap	Carbon Steel	316SS
3	Ball	304SS	316SS
4	Gasket	Stainless Steel Inserted Soft Carbon	Stainless Steel Inserted Soft Carbon
5	Stem	329SS	329SS
6	Seat	Carbon	Carbon
7	Seat Retainer	316SS	316SS
8	Cushion Seal	Soft Carbon	Soft Carbon
9	Thrust Bearing	316SS	316SS
10	Stem Bearing	Soft Carbon	Soft Carbon
11	Gland Packing	Carbon	Carbon
12	Gland	304SS	304SS
13	Gland Flange	Carbon Steel	304SS
14	Stud Bolt	A193 GR B7	See Note
15	Nut	A194 GR 2H	See Note
16	Gland Bolt	A193 GR B7	304SS
17	Stop	Carbon Steel	304SS
18	Snap Ring	Carbon Steel	304SS
19	Inner Ring	316SS	316SS

Note: Class 150, Full Bore ½″—8″
Class 150, Reduced Bore 3″—10″
Class 300, Full Bore ½″—3″
Class 300, Reduced Bore 3″—4″
Bolt: 304SS, Nut: 304SS
Class 300, Full Bore 4″—8″
Class 300, Reduced Bore 6″—10″
Bolt: A193 GR B7, Nut: A194 GR 2H

U.S. Pat. 4269391

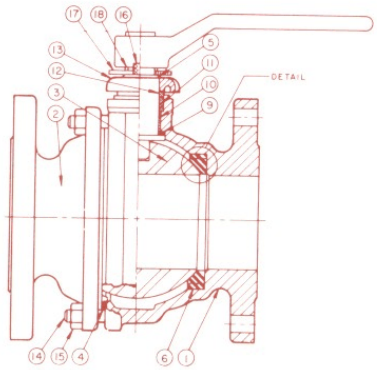

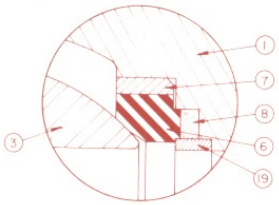

Detail Of Seat Area

PRESSURE — TEMPERATURE RATING

CF8M-316SS

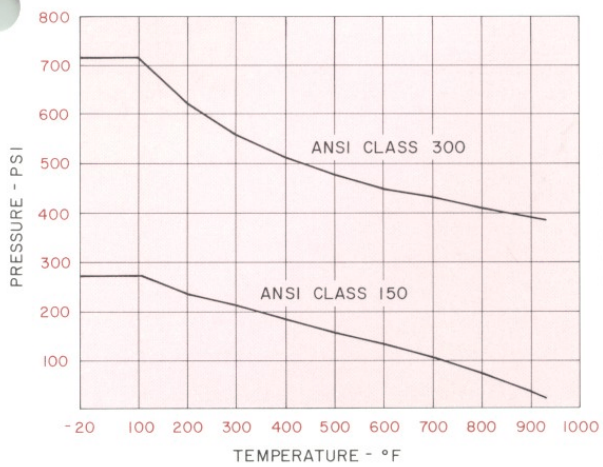

ASTM-A216 WCB-CARBON STEEL

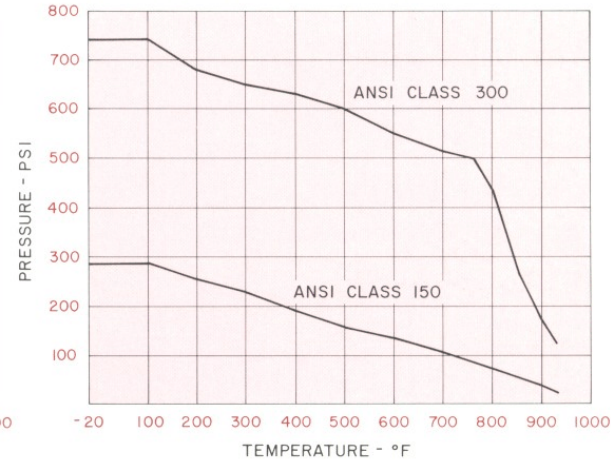

DIMENSIONS

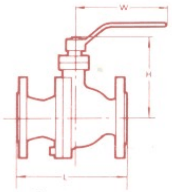

size ½" to 2"

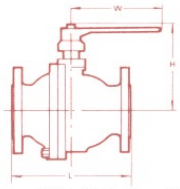

size 2½" to 3" (full bore)
3" & 4" (reduced bore)

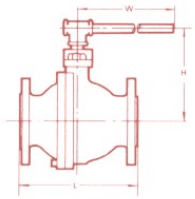

size 4" & 8" (full bore)
6" - 10" (reduced bore)

Flanged Ends

150 lb.

	Valve Size (d)	Bore	L	H	W	Wt/Lb.	D	C	150 LB. FLANGE G	T	N—h	Cv Value
Full Bore	½	½	4¼	2¼	8	5	3½	2⅜	1⅜	⅜	4—⅝	26
	¾	¾	4⅝	2½	8	6.5	3⅞	2¾	1 11/16	13/32	4—⅝	50
	1	1	5	3	9½	10	4¼	3⅛	2	7/16	4—⅝	94
	1½	1½	6½	3¾	13¾	17	5	3⅞	2⅞	9/16	4—⅝	260
	2	2	7	4¼	13¾	23	6	4¾	3⅝	⅝	4—¾	480
	2½	2½	7½	5½	23⅝	42	7	5½	4⅛	11/16	4—¾	750
	3	3	8	6	23⅝	51	7½	6	5	¾	4—¾	1300
	4	4	9	7	42	74	9	7½	6 3/16	15/16	8—¾	2300
	6	6	15½	10¾	65	151	11	9½	8½	1	8—⅞	5400
	8	8	18	13½	59	238	13½	11¾	10⅝	1⅛	8—⅞	10000
Reduced	3	2½	8	5½	23⅝	42	7½	6	5	¾	4—¾	420
	4	3	9	6	23⅝	70	9	7½	6 3/16	15/16	8—¾	770
	6	5	10½	10	65	121	11	9½	8½	1	8—⅞	1800
	8	6	11½	10¾	65	182	13½	11¾	10⅝	1⅛	8—⅞	2500
	10	8	13	13½	59	267	16	14¼	12¾	1 3/16	12—1	4500

300 lb.

	Valve Size (d)	Bore	L	H	W	Wt/Lb.	D	C	300 Lb. FLANGE G	T	N—h	Cv Value
Full Bore	½	½	5½	2¼	8	5.5	3¾	2⅝	1⅜	9/16	4—⅝	26
	¾	¾	6	2½	8	7	4⅝	3¼	1 11/16	⅝	4—¾	50
	1	1	6½	3	9½	11	4⅞	3½	2	11/16	4—¾	94
	1½	1½	7½	3¾	13¾	24	6⅛	4½	2⅞	13/16	4—⅞	260
	2	2	8½	4¼	13¾	33	6½	5	3⅝	⅞	8—¾	480
	2½	2½	9½	5½	23⅝	52	7½	5⅞	4⅛	1	8—⅞	750
	3	3	11⅛	6	23⅝	79	8¼	6⅝	5	1⅛	8—⅞	1300
	4	4	12	7	42	91	10	7⅞	6 3/16	1¼	8—⅞	2300
	6	6	15⅞	10¾	65	151	12½	10⅝	8½	1 7/16	12—⅞	5400
	8	8	19¾	13½	59	267	15	13	10⅝	1⅝	12—1	10000
Reduced	3	2½	11⅛	5½	23⅝	75	8¼	6⅝	5	1⅛	8—⅞	420
	4	3	12	6	23⅝	84	10	7⅞	6 3/16	1¼	8—⅞	770
	6	5	15⅞	10	65	148	12½	10⅝	8½	1 7/16	12—⅞	1800
	8	6	16½	10¾	65	208	15	13	10⅝	1⅝	12—1	2500
	10	8	18	13½	59	317	17½	15¼	12¾	1⅞	16—1⅛	4500

End flanges 1/16" RF 150 Lb., 300 Lb. Conforming to ANSI B16.5
Gear operator available if desired